JS Series
Sub-Miniature Slide Switches

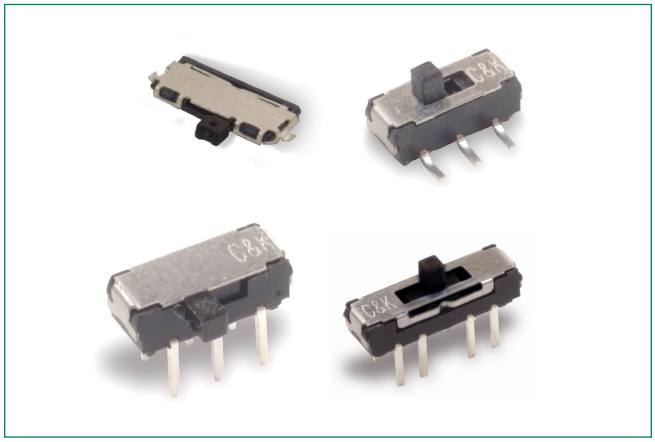

Description

Designers of telecommunication products, computer peripherals, thermostat select switches, and other various instrumentations need a switch that's low-profile while still performing at a high level. The JS series sub-miniature slide switches feature positive detent, an IR reflow to 260° solder profile, surface and thru hole mounting – and are available in SPDT, DPDT and DP3T models.

Features & Benefits

- Positive detent
- Low profile
- IR reflow to 260° solder profile
- Surface and thru hole mounting
- SPDT, DPDT, DP3T models
- RoHS compliant

Applications

- Telecommunication products
- Computer peripherals
- Thermostat select switch
- Instrumentation
- Medical

Specifications

Contact Rating	0.3A @ 6VDC or 0.1A @ 30VDC
Electrical Life	5,000 make-and-break cycles
Contact Resistance	70 m Ω max.
Insulation Resistance	100 M Ω min. @ 500V
Dielectric Strength	500 VAC min. @ sea level
Operating Temperature	-40°C to 85°C
Storage Temperature	-40°C to 85°C

Materials

Housing	4/6 nylon, black
Actuator	4/6 nylon, black (some options white)
Contacts	Copper alloy, silver or gold plated
Terminals	Brass, silver or gold plated

Notes: Specifications and materials listed above are for switches with standard options. For information on specific and custom switches, consult Customer Service Center.

Ordering Number

Our easy build-a-switch concept allows you to mix and match options to create the switch you need. To order, select desired option from each category and place it in the appropriate box.

JS - xxxx - xx - xx - x - N - x

Switch Function
1020: SPDT
2020: DPDT
2030: DP3T
2070: DP3T, Mom.
(Termination C, SC & JC only)

Sequence Number
11: Standard
00: Available for JS102000SAQN only

Termination
A: Right Angle, PC Thru-hole
C: Vertical, PC Thru-hole
SA: Right Angle, Gullwing (JS10 model only)
SC: Vertical, Gullwing
JA: Right Angle, J Bend
JC: Vertical, J Bend

Contact Material
Q: Silver
B: Gold

Non-Shorting
N: Non-shorting

NONE: Non-Momentary
R: Momentary on the right
L: Momentary on the left

© 2026 Littelfuse, Inc.
Specifications are subject to change without notice.
Revised: VL 01/14/26

JS Series
Sub-Miniature Slide Switches

Right Angle, PC Thru-hole

JS202011AQN DPDT Shown in Position B

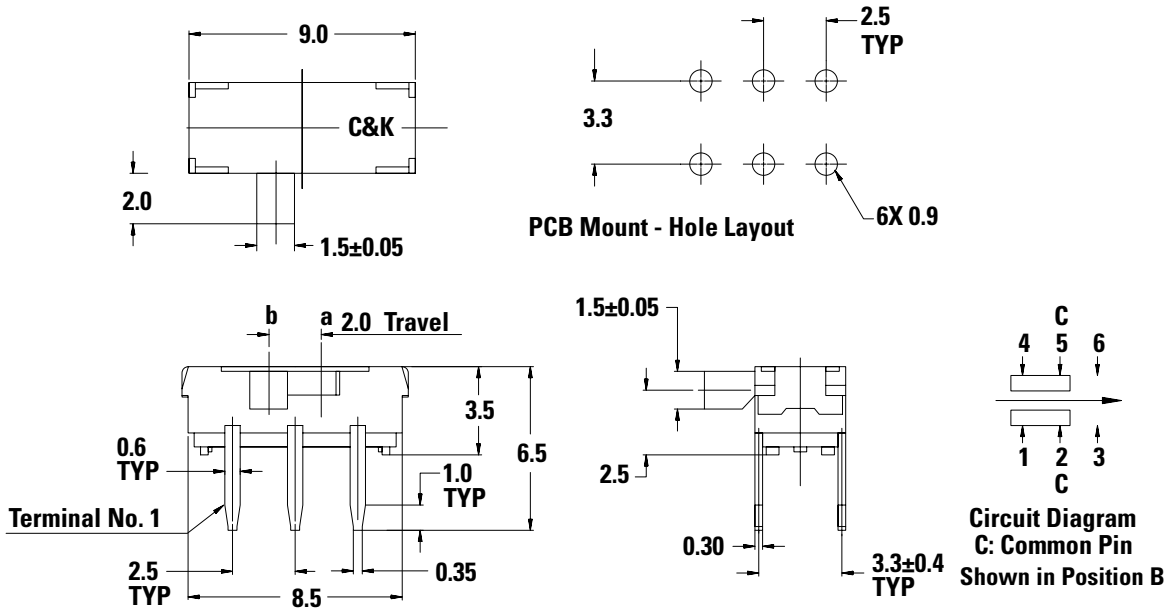

JS203011AQN DP3T Shown in Position B

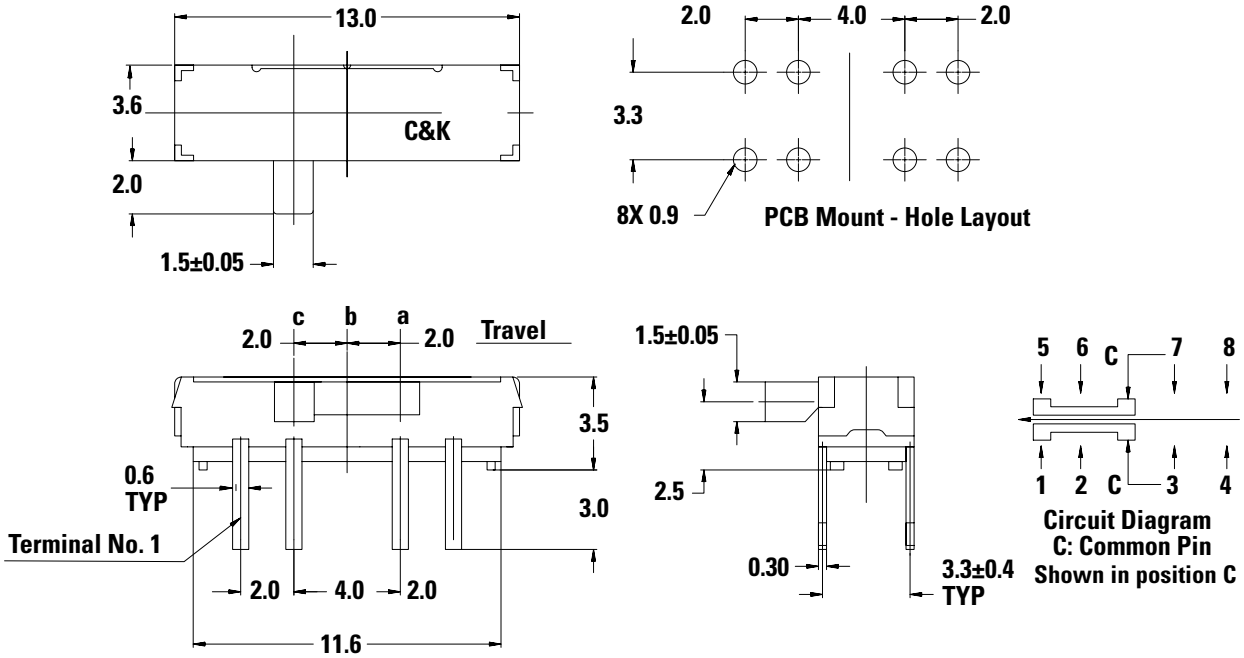

© 2026 Littelfuse, Inc.
Specifications are subject to change without notice.
Revised: VL 01/14/26

PC Thru-hole

JS203011CQN DP3T Shown in Position B

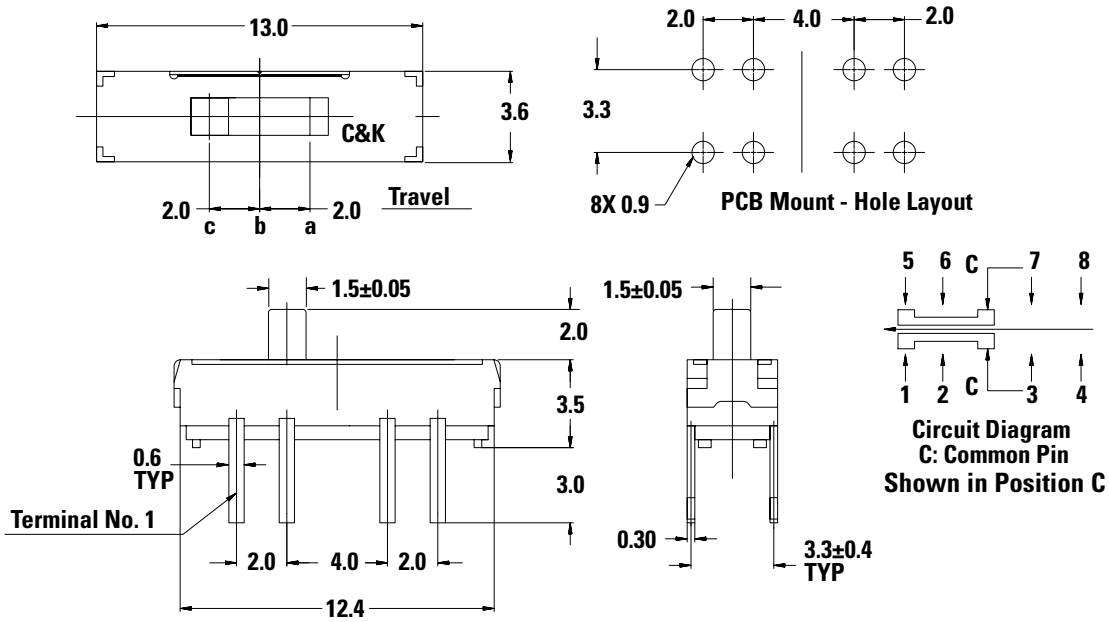

JS202011CQN DPDT Shown in Position A

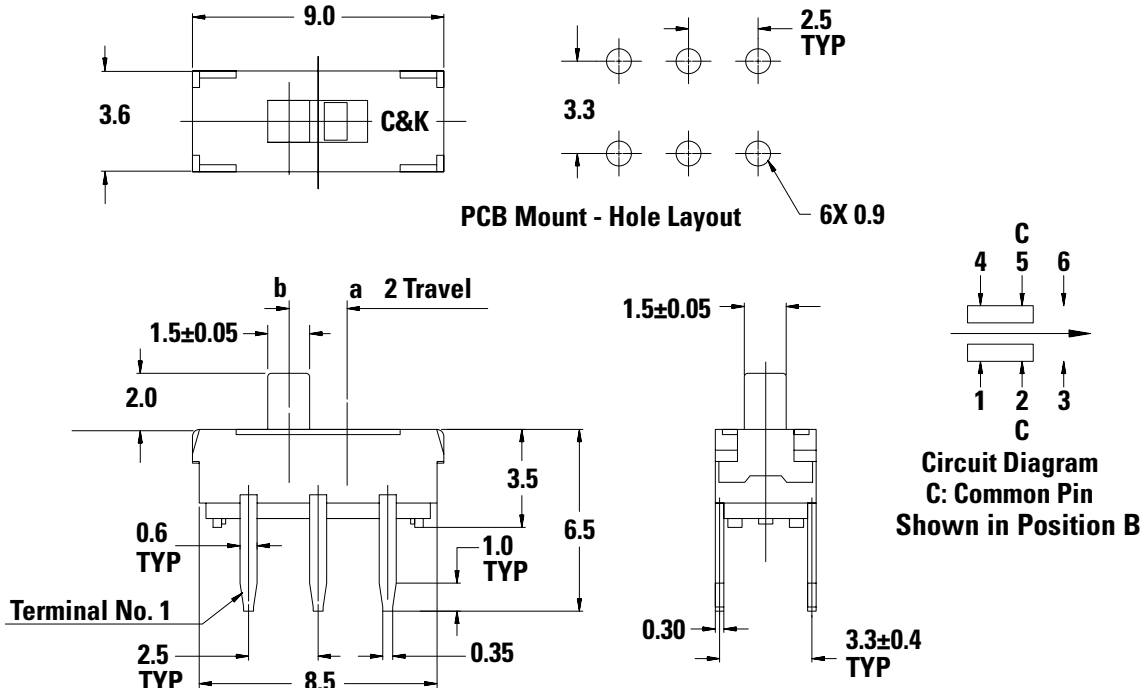

© 2026 Littelfuse, Inc.
Specifications are subject to change without notice.
Revised: VL 01/14/26

JS Series
Sub-Miniature Slide Switches

Surface Mount

JS202011SCQN DPDT Shown in position B. Quantity per reel 1000. Available in tape & reel only

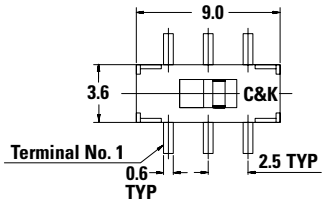

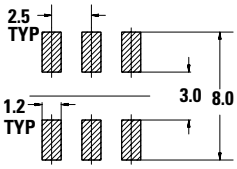

PCB Mount - Tolerance ±.002(0.05)

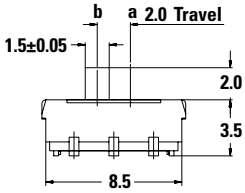

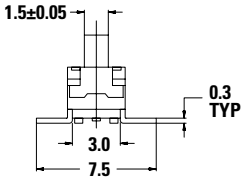

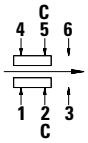

C Shown in Position B
C: Common Pin

JS203011SCQN DP3T Quantity per reel 900. Available in tape & reel only

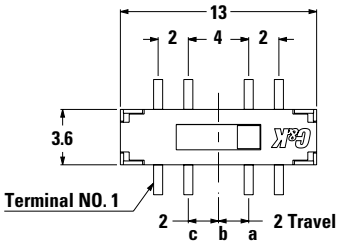

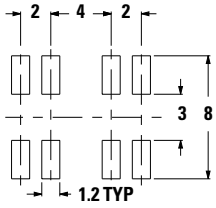

PC Mount - Tolerance ± .002 [0.05]

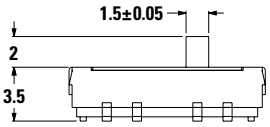

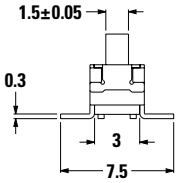

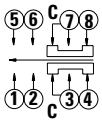

Circuit Diagram
C: Common Pin

Right Angle Surface Mount

JS102011SAQN SPDT Shown in position A. Available in tape & reel only

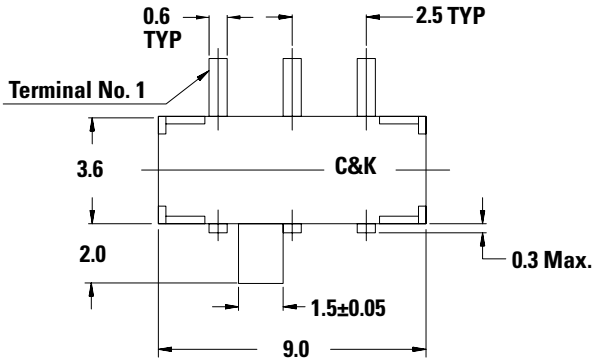

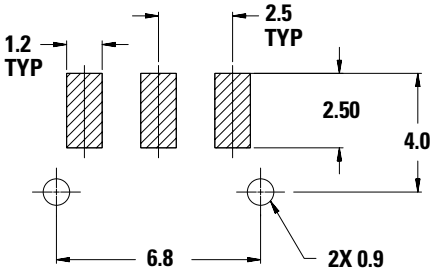

PCB Mount - Hole Layout

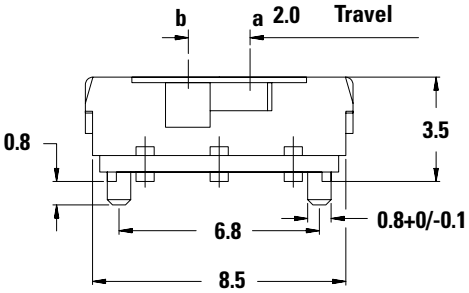

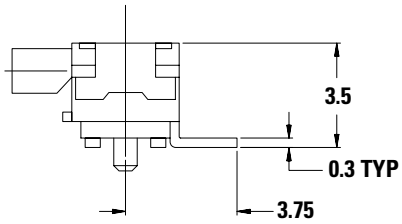

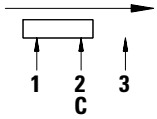

Circuit Diagram
C: Common Pin
Shown in POS. B

© 2026 Littelfuse, Inc.
Specifications are subject to change without notice.
Revised: VL 01/14/26

JS Series
Sub-Miniature Slide Switches

PC Thru-hole

JS102011CQN SPDT Shown in position A.

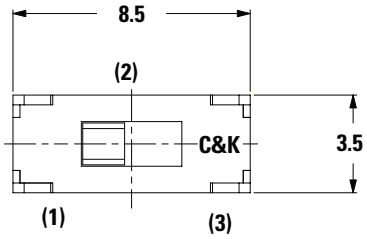

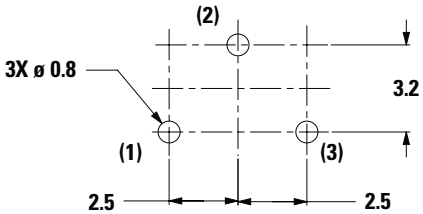

PCB Layout Recommended

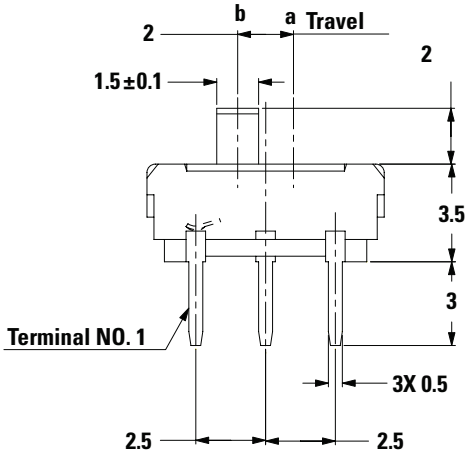

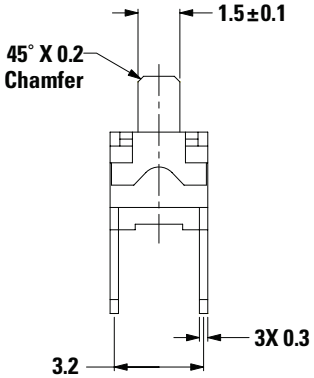

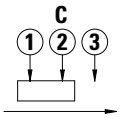

Schematic
Shown in POS. B

Surface Mount

JS102011SCQN SPDT

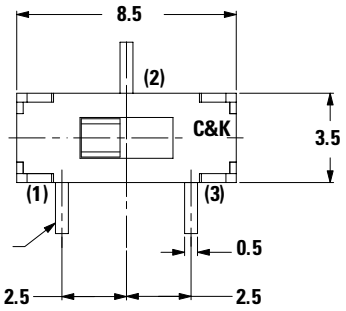

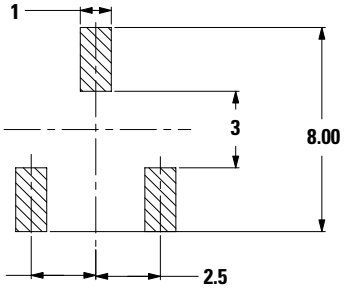

PCB LAYOUT RECOMMENDED

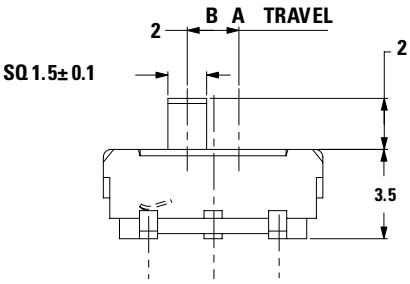

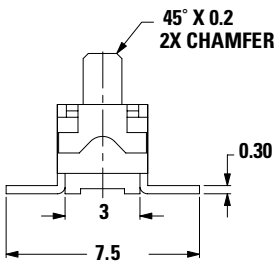

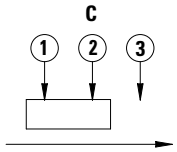

SCHEMATIC
Shown in position B

© 2026 Littelfuse, Inc.
Specifications are subject to change without notice.
Revised: VL 01/14/26

JS Series
Sub-Miniature Slide Switches

Surface Mount

JS207011SCQNR DP3T Shown in position B.

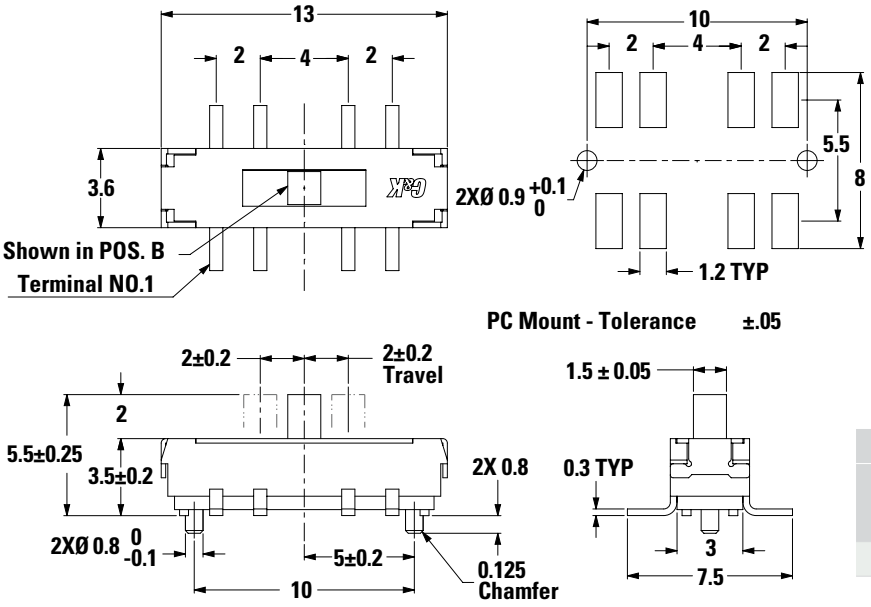

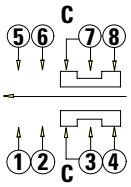

Circuit Diagram
C: Common Pin
Bottom View

Switch Function		
POS.C	POS.B	POS.A
(MOM)	On	
Connected Terminals		
1-3, 5-7	2-3, 6-7	3-4, 7-8

© 2026 Littelfuse, Inc.
Specifications are subject to change without notice.
Revised: VL 01/14/26

JS Series
Sub-Miniature Slide Switches

PC Thru-hole
JS207011CQNR DP3T shown in position B

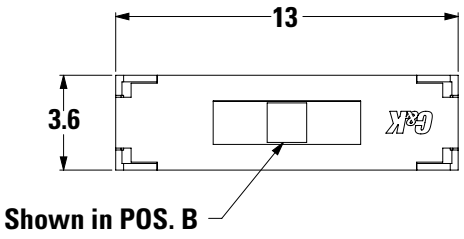

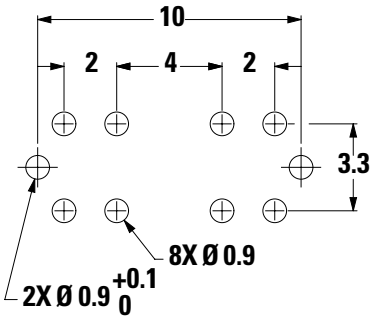

PC Mount - Tolerance ± .05

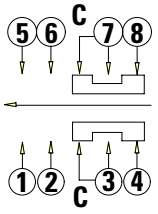

Circuit Diagram
C: Common Pin
Bottom View

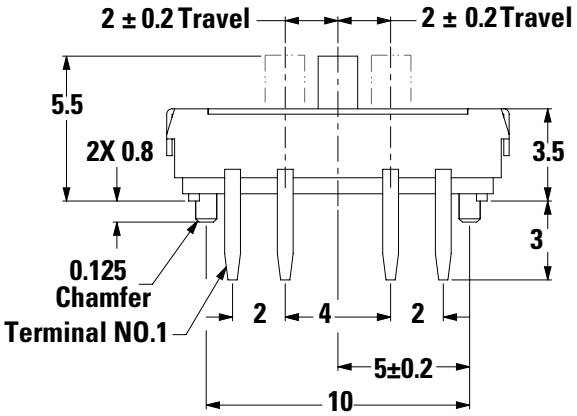

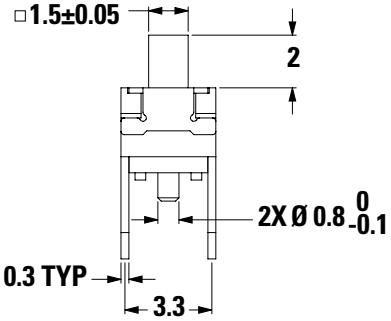

Switch Function		
POS.c C&K	POS.b C&K	POS.a C&K
(MOM)	On	
Connected Terminals		
1-3, 5-7	2-3, 6-7	3-4, 7-8

Right Angle Surface Mount
JS102011JAQN SPDT Shown in A. Available in tape & reel only

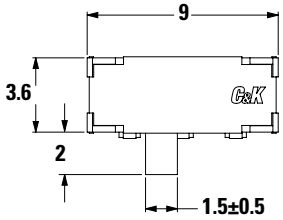

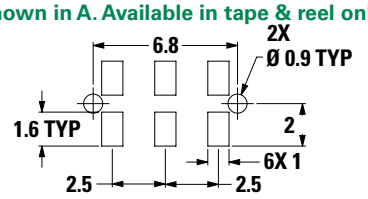

PCB Layout Recommended

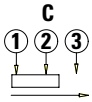

Circuit Diagram
C: Common Pin
Bottom View

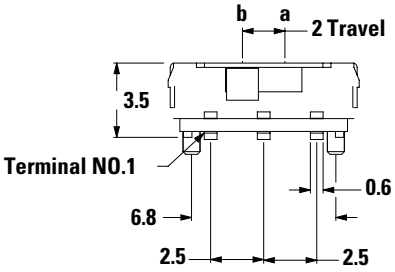

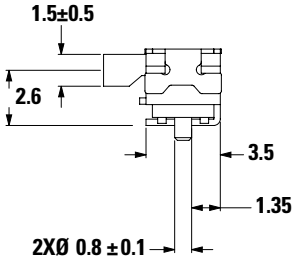

© 2026 Littelfuse, Inc.
Specifications are subject to change without notice.
Revised: VL 01/14/26

Vertical Mount SMT - J Bend
JS102011JCQN SPDT. Available in tape & reel only

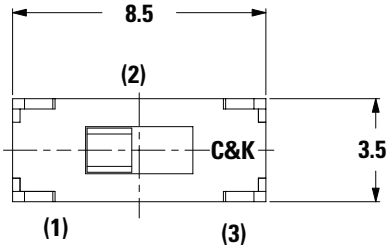

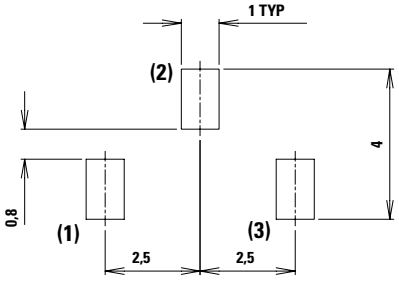

PCB Layout Recommended

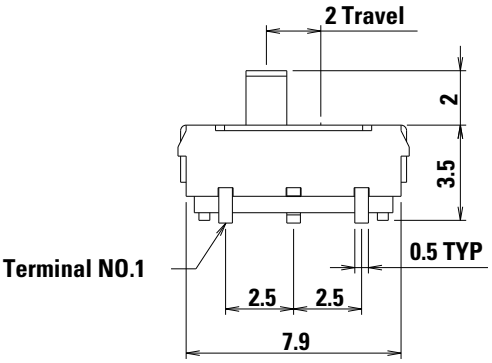

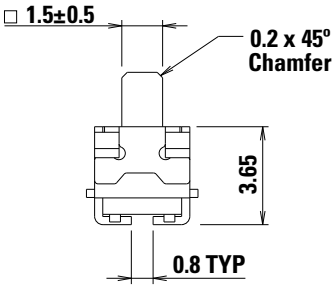

Right Angle Surface Mount
JS202011JAQN DPDT Shown in Position A. Available in tape & reel only

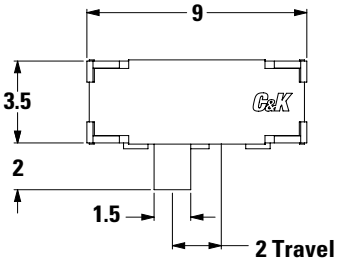

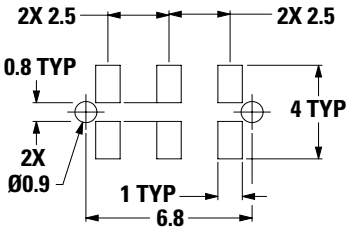

PCB Layout Recommended

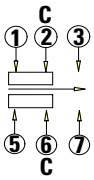

Circuit Diagram
C: Common Pin
Bottom View

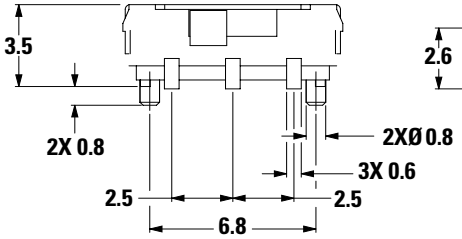

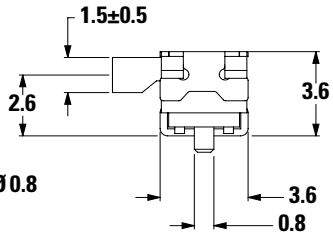

(Gap Between Terminals)

© 2026 Littelfuse, Inc.
Specifications are subject to change without notice.
Revised: VL 01/14/26

JS Series
Sub-Miniature Slide Switches

Vertical Mount SMT - J Bend
JS202011JCQN DPDT Shown in position B. Available in tap & reel only

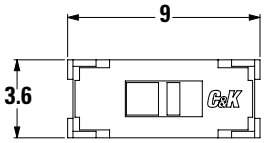

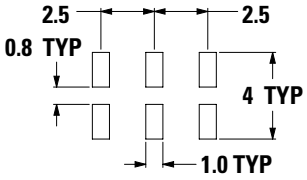

PCB Layout Recommended

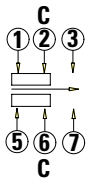

Circuit Diagram
C: Common Pin
Bottom View

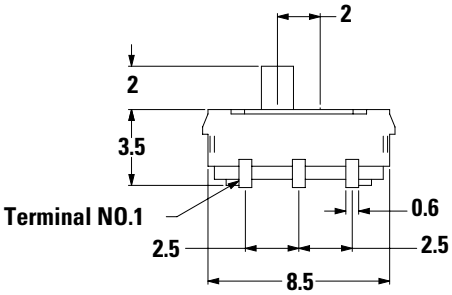

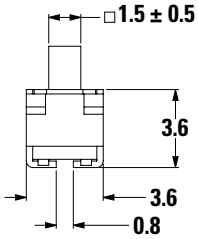

Right Angle Mount SMT - J Bend
JS203011JAQN DP3T Shown in position B. Available in tape & reel only

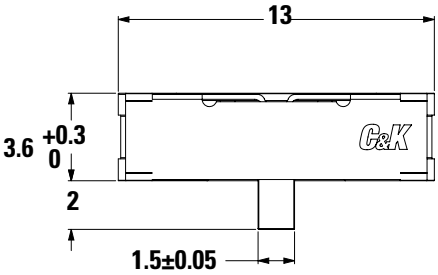

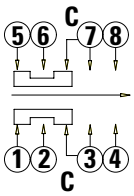

Schematic
C: Common Pin

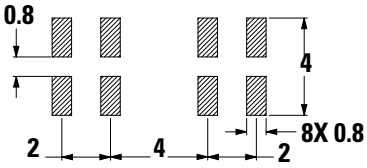

PCB Layout Recommended

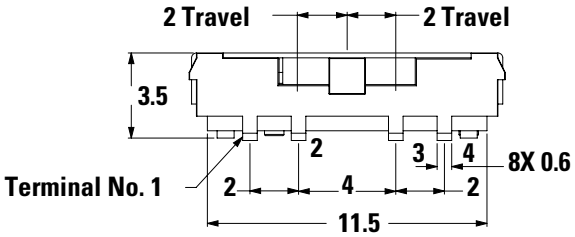

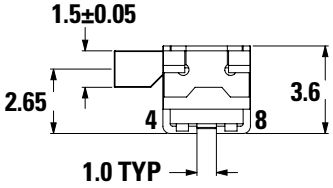

© 2026 Littelfuse, Inc.
Specifications are subject to change without notice.
Revised: VL 01/14/26

JS Series
Sub-Miniature Slide Switches

Vertical Mount SMT - J Bend
JS203011JCQN DP3T Shown in position B. Available in tape & reel only

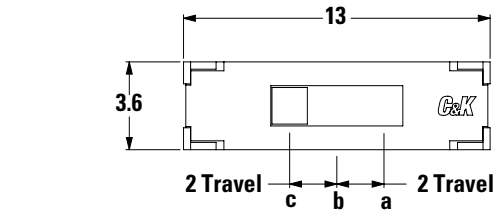

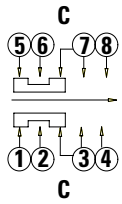

Schematic
C: Common Pin

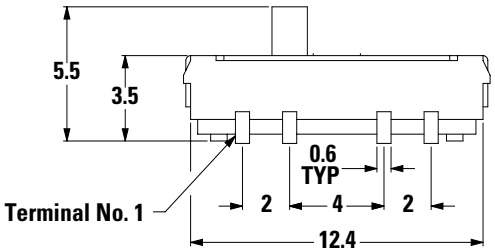

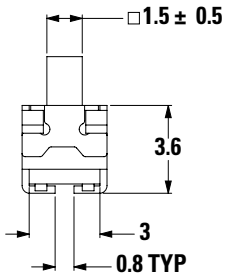

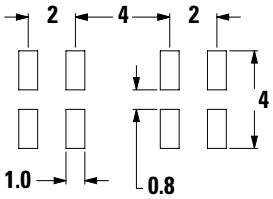

PCB Layout Recommended

Surface Mount - J Bend
JS207011JCQNR DP3T. Available in tape & reel only

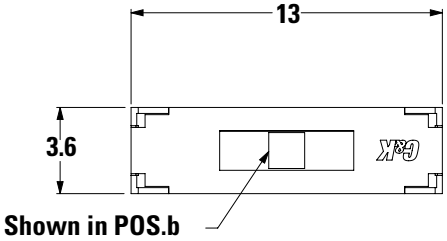

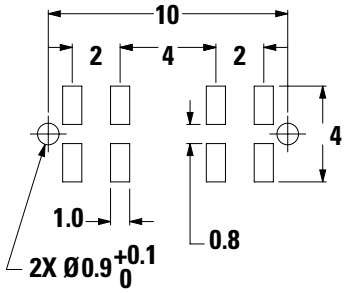

PC Mount - Tolerance ± .05

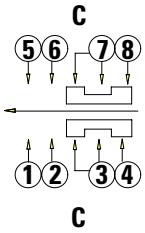

Circuit Diagram
C: Common Pin
Bottom View

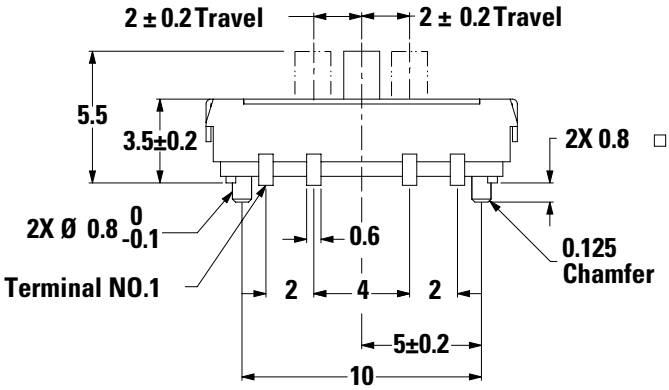

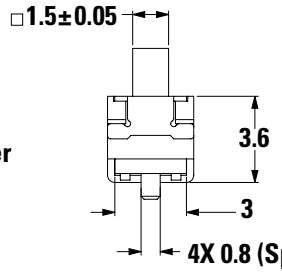

Switch Function		
POS.c	POS.b	POS.a
(MOM)	On	
Connected Terminals		
1-3, 5-7	2-3, 6-7	3-4, 7-8

© 2026 Littelfuse, Inc.
Specifications are subject to change without notice.
Revised: VL 01/14/26

Tape and Reel for Part Number JS207011SCQNR, JS207011JCQNR

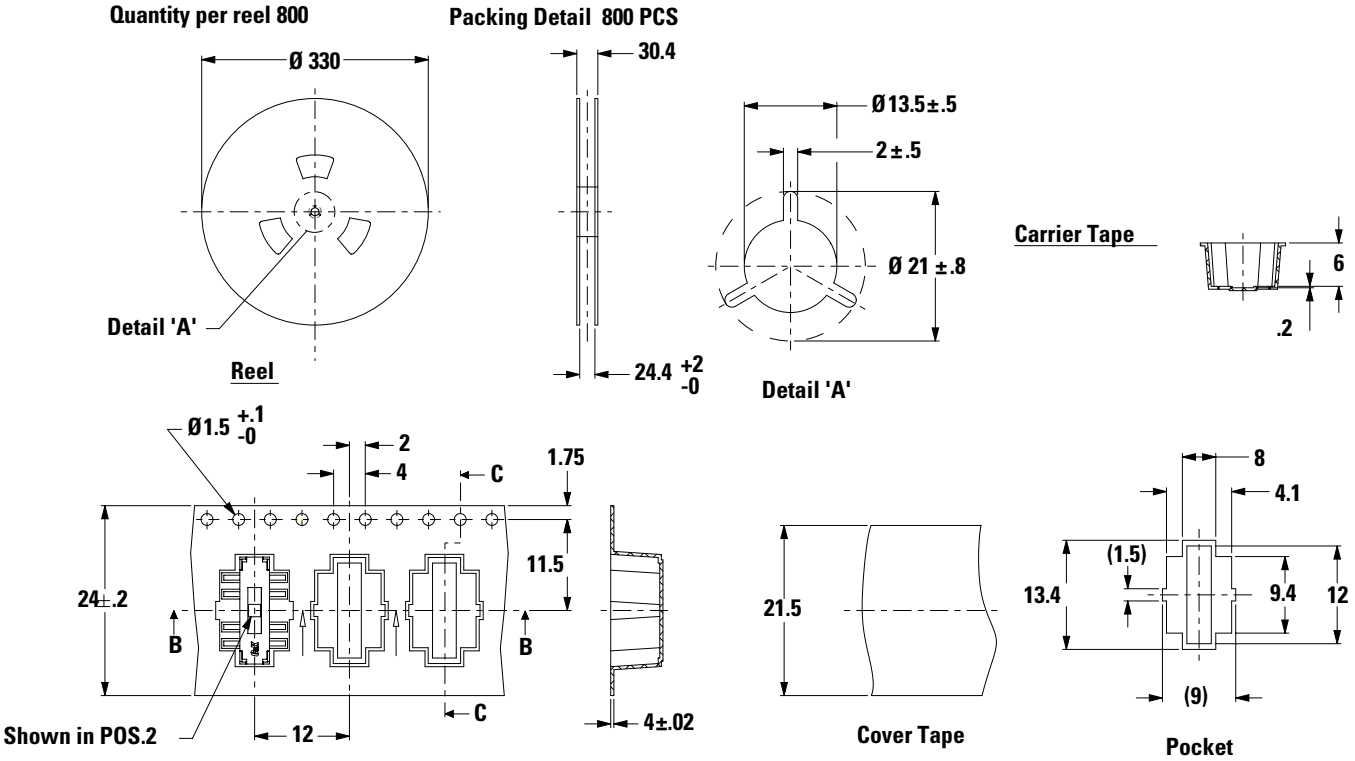

Tape and Reel for Part Number JS202011SCQN

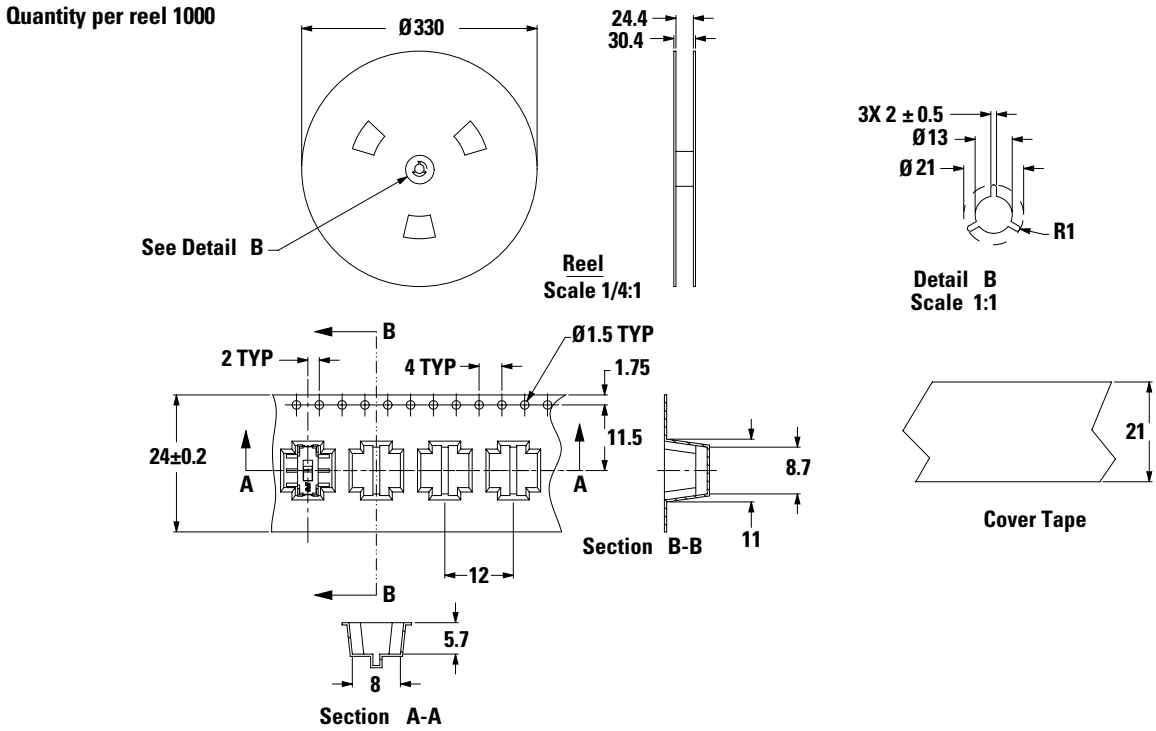

© 2026 Littelfuse, Inc.
Specifications are subject to change without notice.
Revised: VL 01/14/26

JS Series
Sub-Miniature Slide Switches

Tape and Reel for Part Number JS102011SCQN, JS102011JCQN

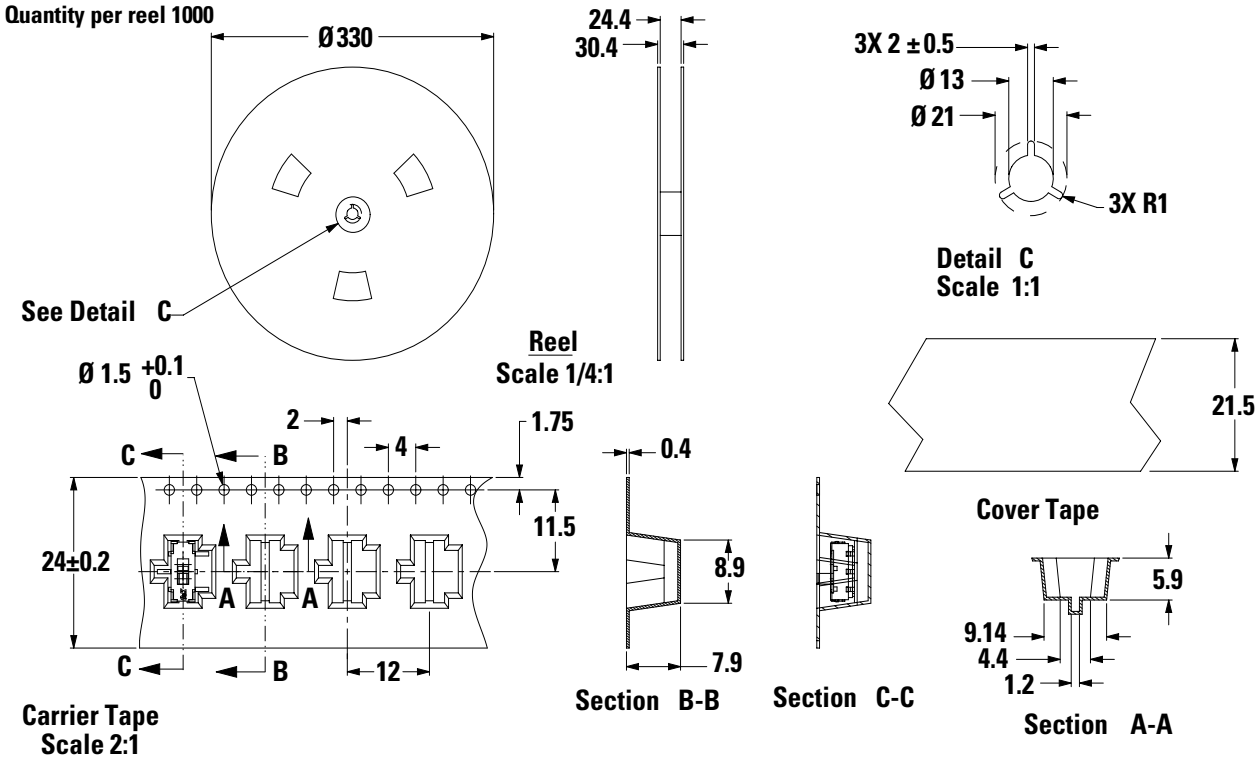

Tape and Reel for Part Number JS102011SAQN, JS102011JAQN

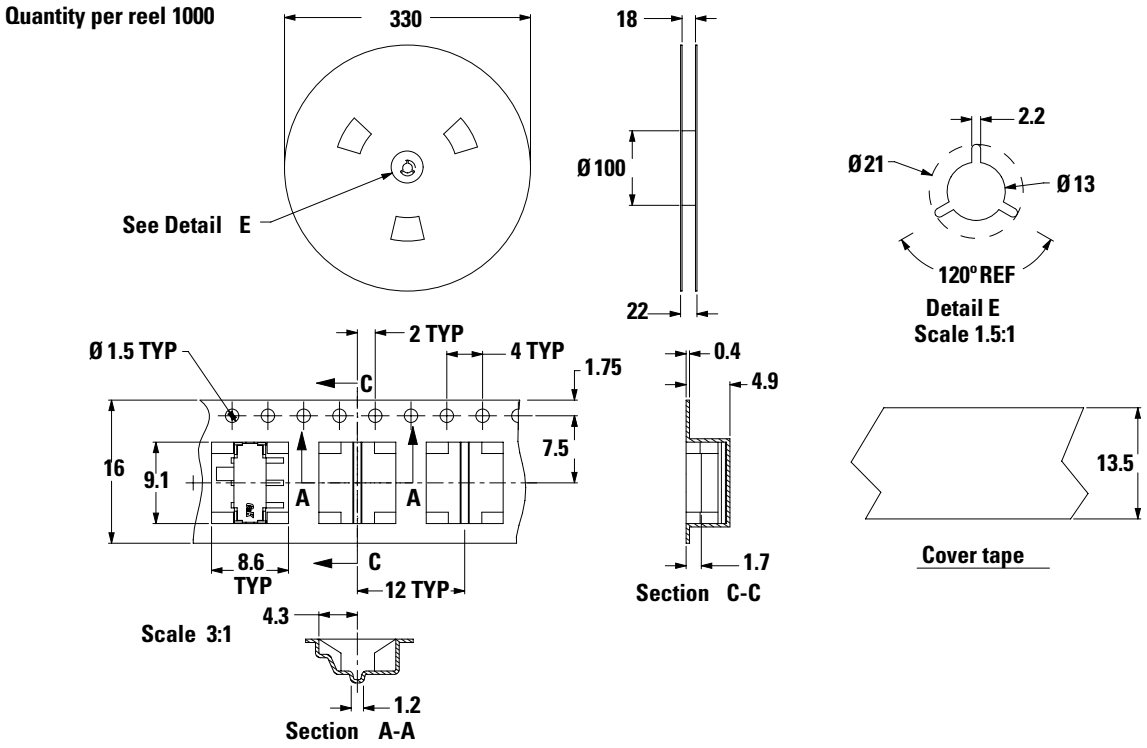

© 2026 Littelfuse, Inc.
Specifications are subject to change without notice.
Revised: VL 01/14/26

Tape and Reel for Part Number JS203011SCQN, JS203011JCQN

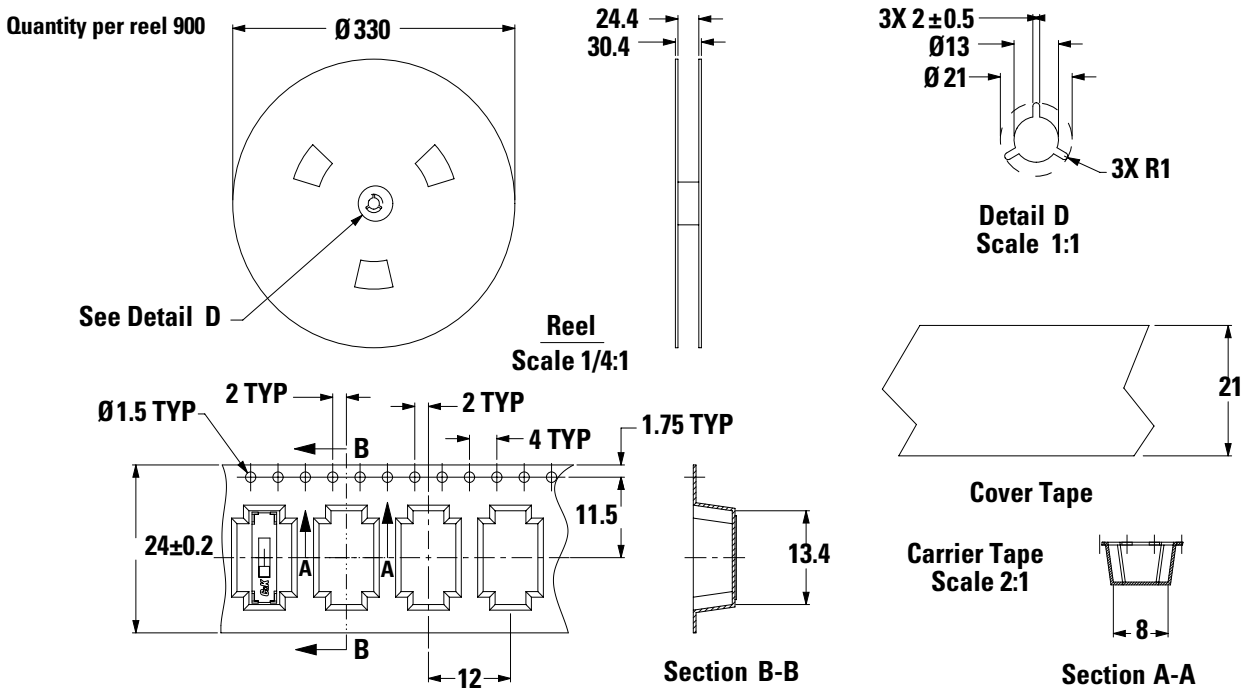

Tape and Reel for Part Number JS203011JAQN

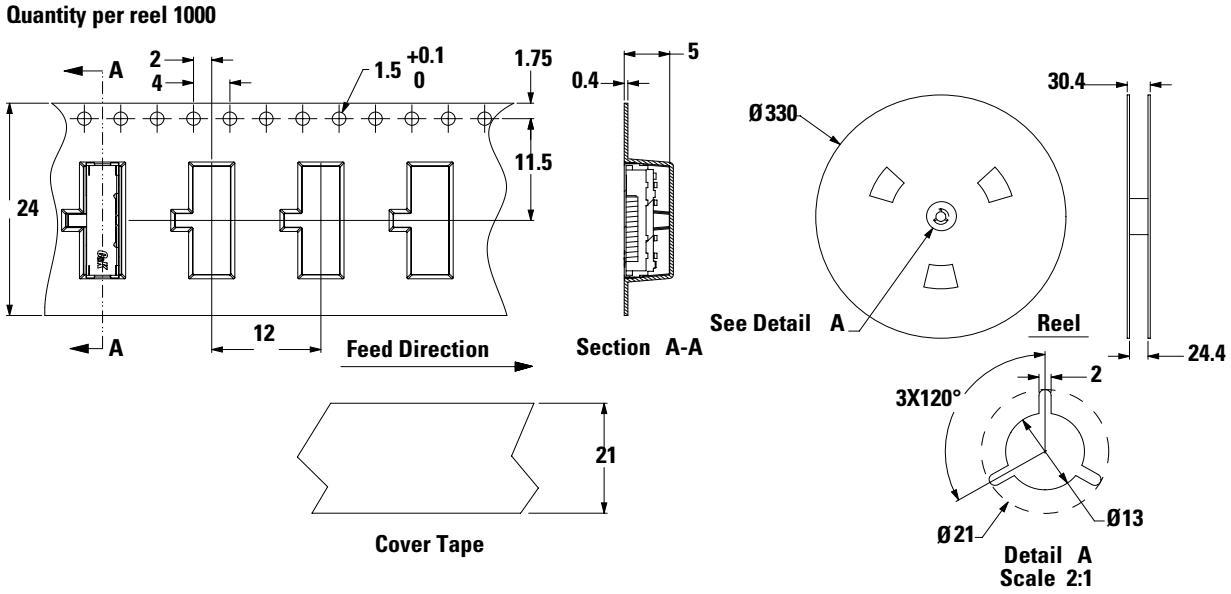

© 2026 Littelfuse, Inc.
Specifications are subject to change without notice.
Revised: VL 01/14/26

Tape and Reel for Part Number JS202011JCQN

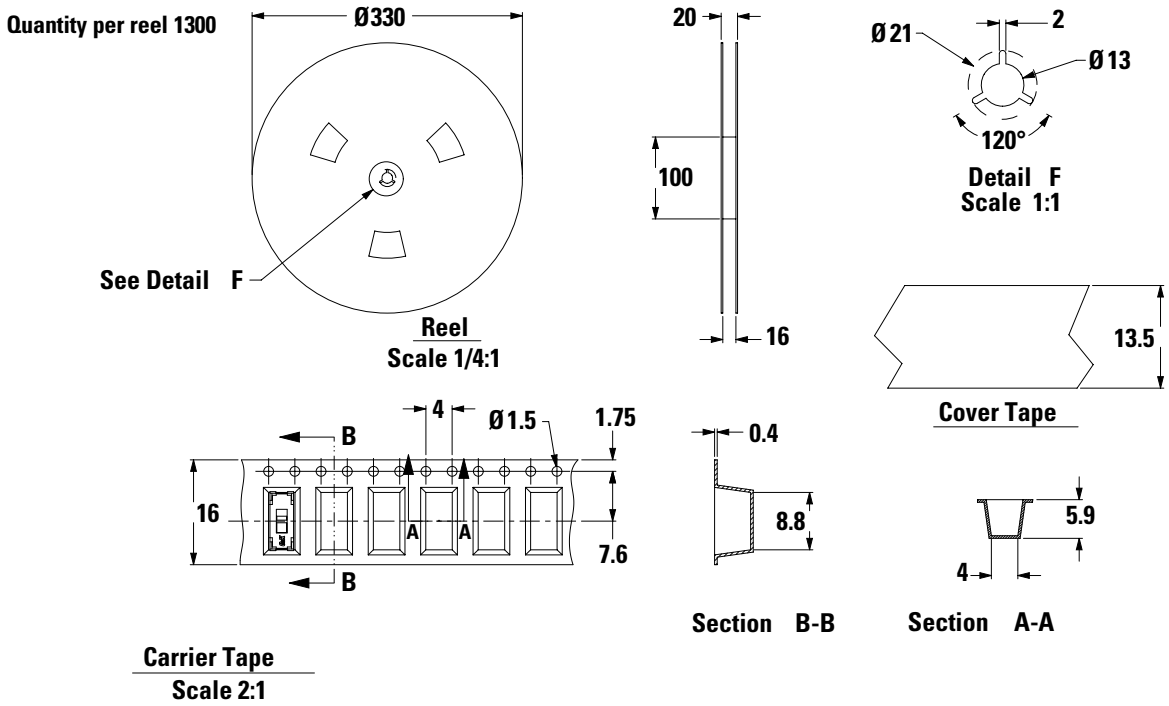

Tape and Reel for Part Number JS202011JAQN

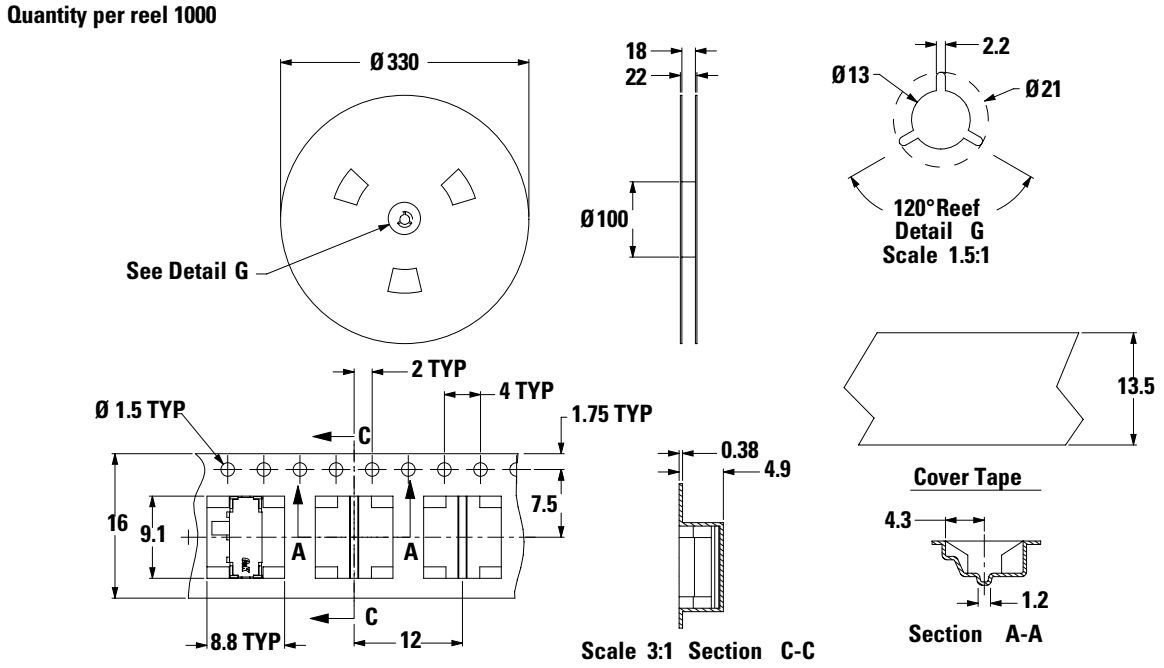

© 2026 Littelfuse, Inc.
Specifications are subject to change without notice.
Revised: VL 01/14/26

JS Series
Sub-Miniature Slide Switches

Right Angle Surface Mount
Low Profile 0.028 ± 0.004 (0.7±0.1) High
JS102000SAQN SPDT

Specifications

Contact Rating	5 VDC @ 1 mA
Electrical Life	15,000 cycles
Contact Resistance	<100 m ohms (initial) <200 m ohms (after processing)
Insulation Resistance	100 m ohms @500 VDC
Dielectric Strength	250 VAC.
Operating Temperature	-40°C to 85°C

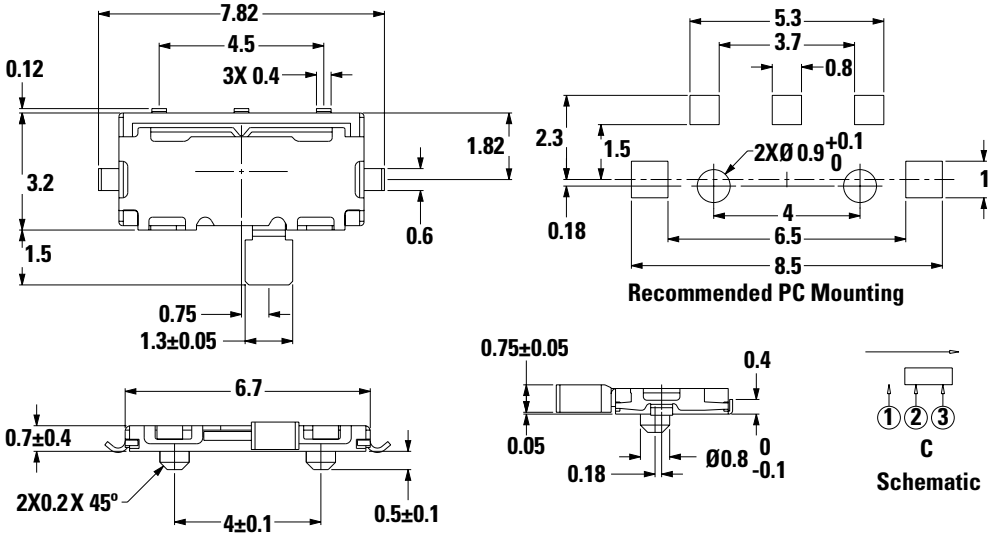

Tape and Reel for Part Number JS102000SAQN

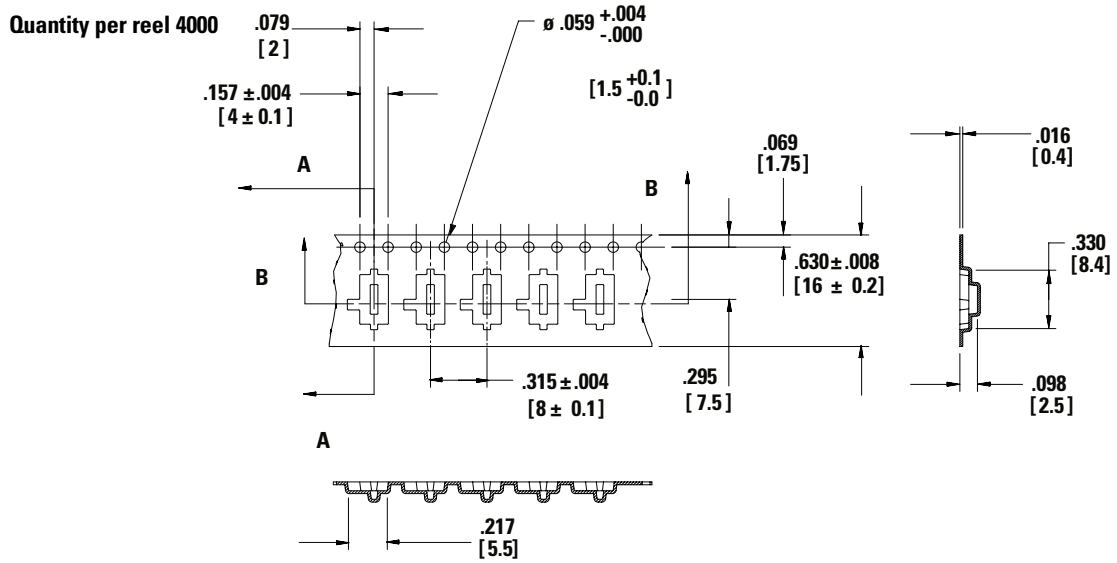

Disclaimer Notice - Information furnished is believed to be accurate and reliable. However, users should independently evaluate the suitability of and test each product selected for their own applications. Littelfuse products are not designed for, and may not be used in, all applications. Read complete Disclaimer Notice at http://www.littelfuse.com/disclaimer-electronics.

© 2026 Littelfuse, Inc.
Specifications are subject to change without notice.
Revised: VL 01/14/26